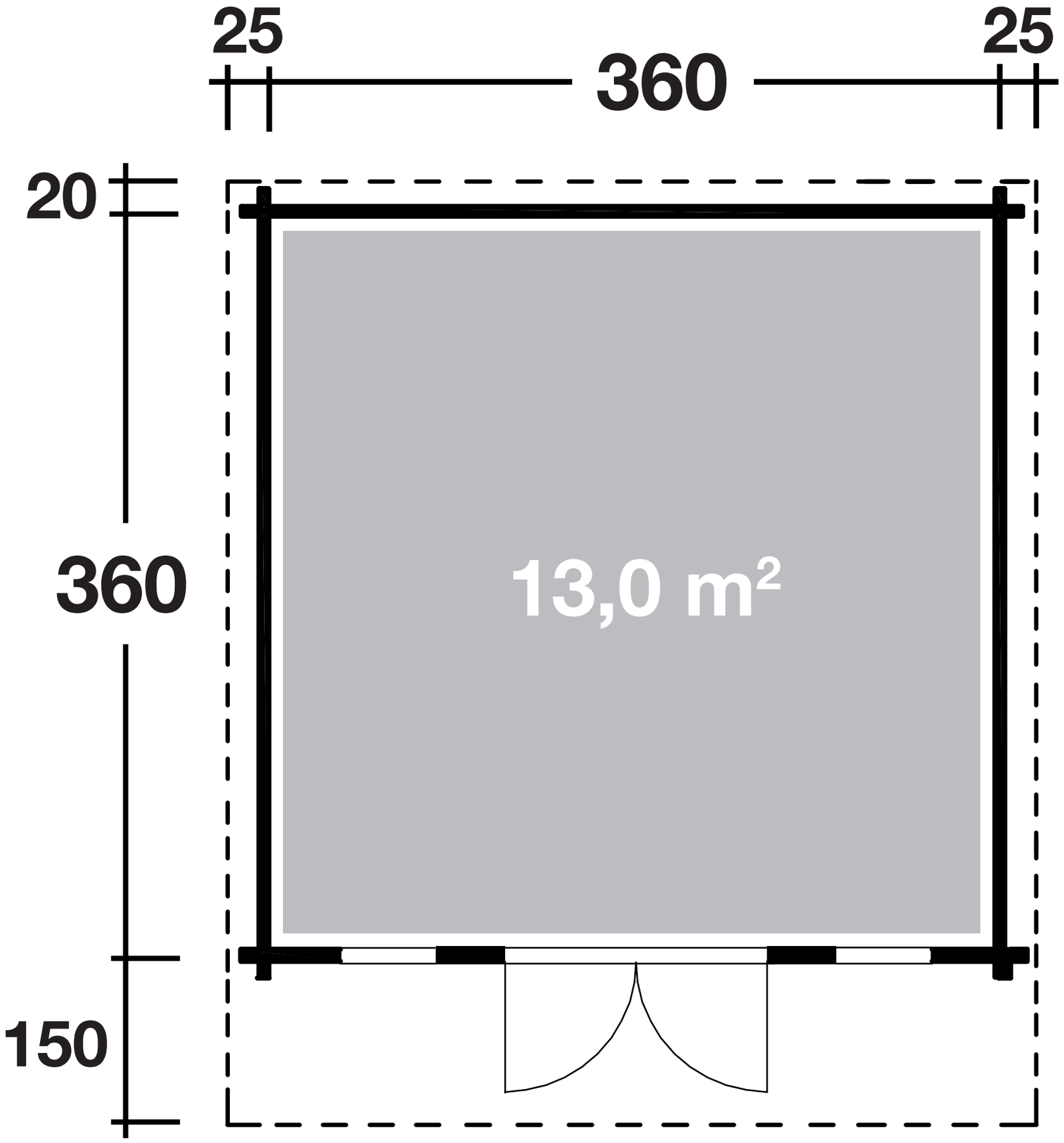
25
360
25
20
360
13,0 m²
150