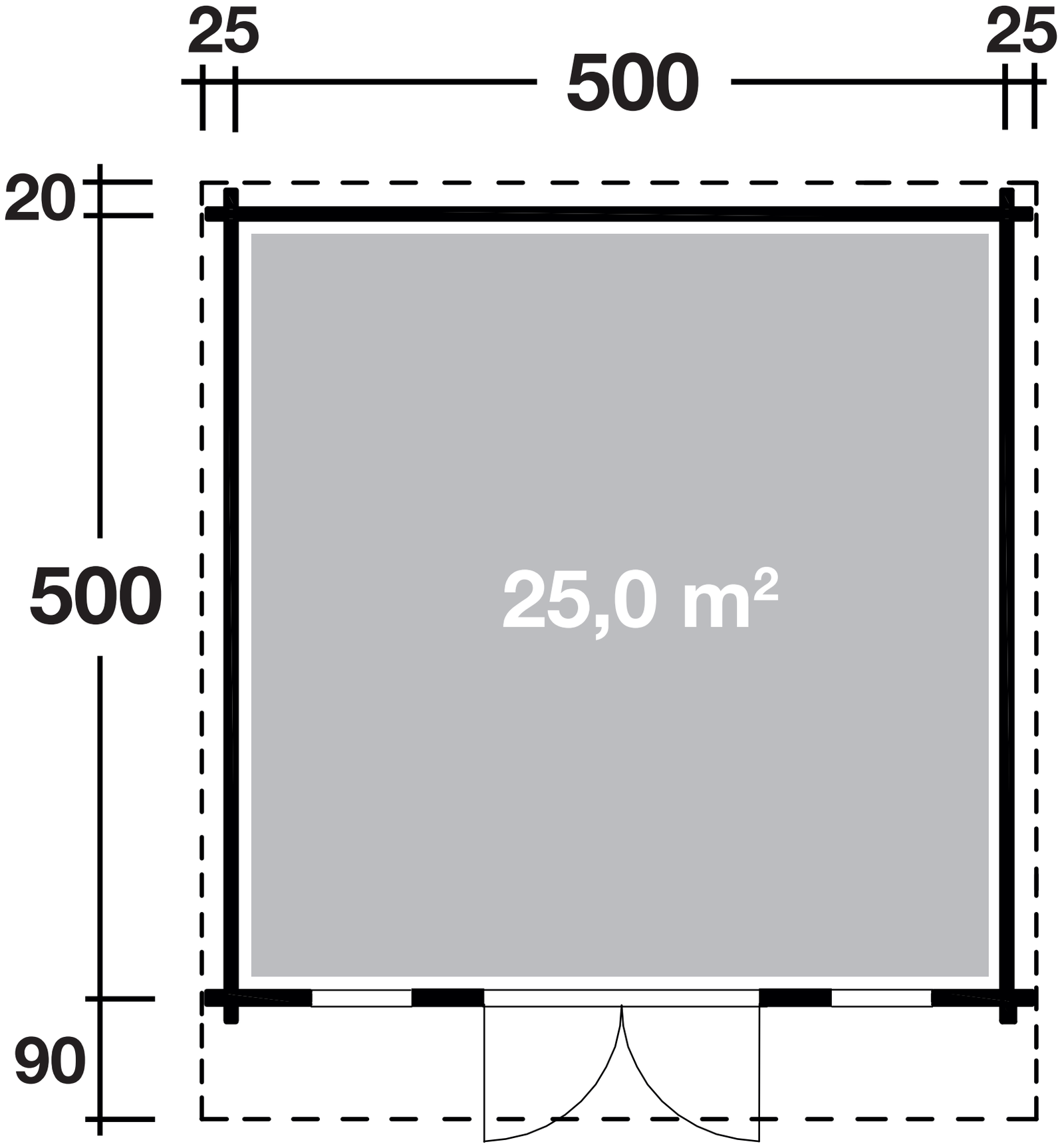
25
500
25
20
500
25,0 m²
90